REMOVAL

HINT:
A bolt without a torque specification is shown in the standard bolt chart (See page SS-2).

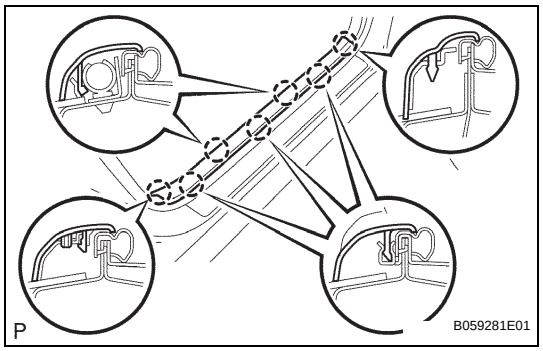

1. **REMOVE FRONT DOOR SCUFF PLATE LH**
   (a) Using a screwdriver, remove the scuff plate.
   HINT:
   Tape the screwdriver tip before use.
2. **REMOVE FRONT DOOR SCUFF PLATE RH**
   HINT:
   Use the same procedures described for the LH side.

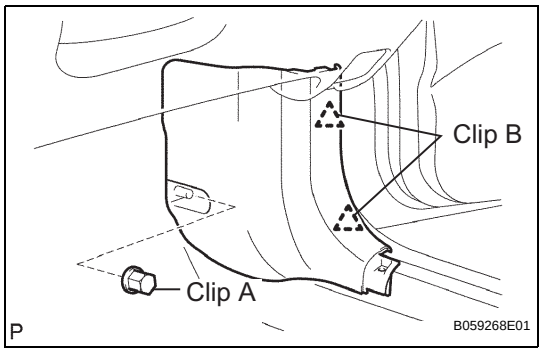

3. **REMOVE COWL SIDE TRIM BOARD LH**
   (a) Remove the clip labeled A.
   (b) Using a screwdriver, disengage the 2 clips labeled B and remove the trim board.
   HINT:
   Tape the screwdriver tip before use.
4. **REMOVE COWL SIDE TRIM BOARD RH**
   HINT:
   Use the same procedures described for the LH side.

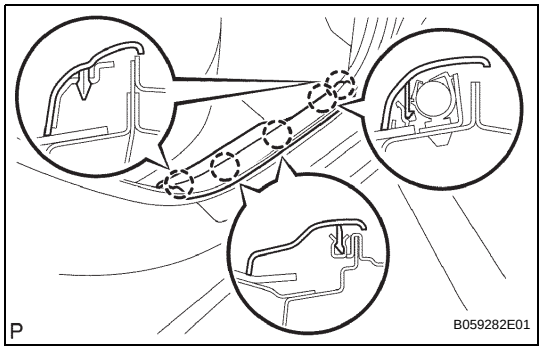

5. **REMOVE REAR DOOR SCUFF PLATE LH**
   (a) Using a screwdriver, remove the scuff plate.
   HINT:
   Tape the screwdriver tip before use.
6. **REMOVE REAR DOOR SCUFF PLATE RH**
   HINT:
   Use the same procedures described for the LH side.
7. **REMOVE FRONT DOOR OPENING TRIM LH**
8. **REMOVE FRONT DOOR OPENING TRIM RH**
9. **REMOVE REAR DOOR OPENING TRIM LH**
10. **REMOVE REAR DOOR OPENING TRIM RH**

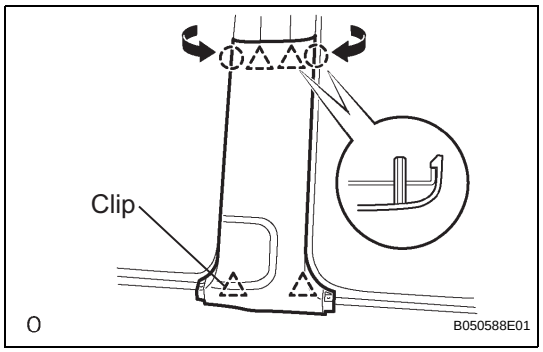

11. **REMOVE CENTER PILLAR LOWER GARNISH LH**
    (a) Using a screwdriver, pull the garnish lower upward to remove it.
    HINT:
    Tape the screwdriver tip before use.
12. **REMOVE CENTER PILLAR LOWER GARNISH RH**
    HINT:
    Use the same procedures described for the LH side.

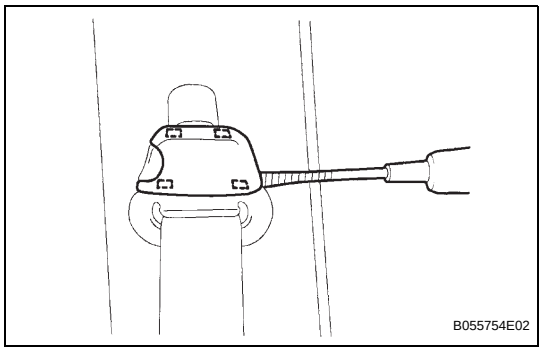

13. REMOVE CENTER PILLAR GARNISH LH

(a) Using a screwdriver, remove the shoulder anchor cover cap.
HINT:
Tape the screwdriver tip before use.

(b) Remove the bolt and disconnect the front seat outer belt (shoulder anchor side).

(c) Remove the bolt and disconnect the front seat outer belt (floor anchor side).

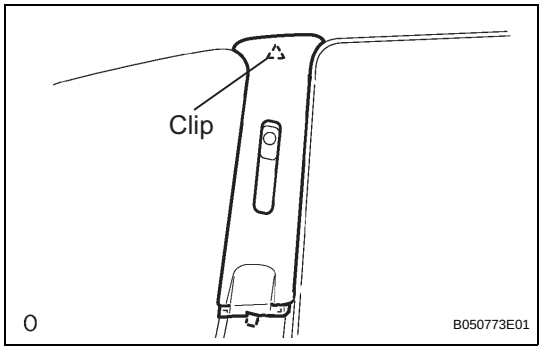

(d) Using a screwdriver, remove the pillar garnish.
HINT:
Tape the screwdriver tip before use.

14. REMOVE CENTER PILLAR GARNISH RH

HINT:
Use the same procedures described for the LH side.

15. REMOVE NO. 2 DECK BOARD

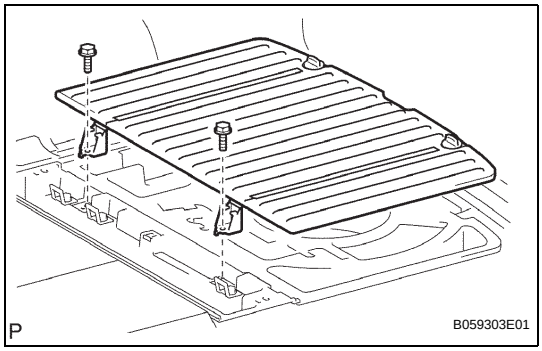

16. REMOVE DECK BOARD SUB-ASSEMBLY

(a) Remove the 2 bolts and deck board.

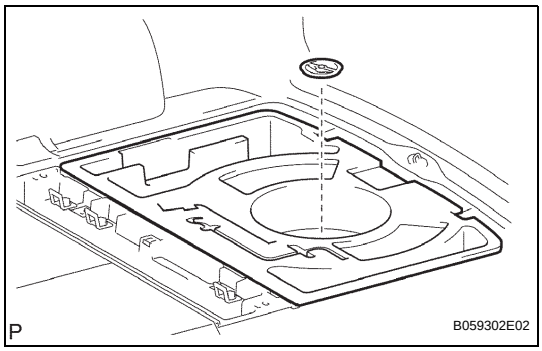

17. REMOVE REAR DECK FLOOR BOX

(a) Loosening the spare wheel carrier and remove the deck floor box rear.

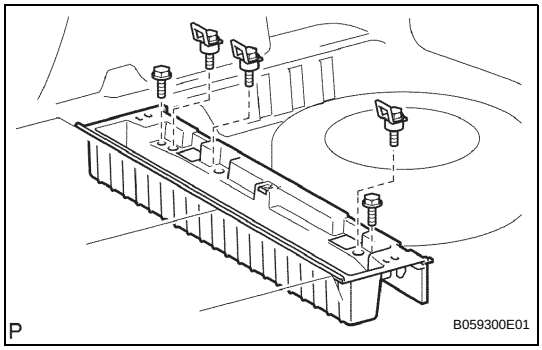

18. REMOVE LUGGAGE COMPARTMENT TRAY

(a) Remove the 5 bolts and luggage compartment tray.

19. REMOVE BACK DOOR WEATHERSTRIP

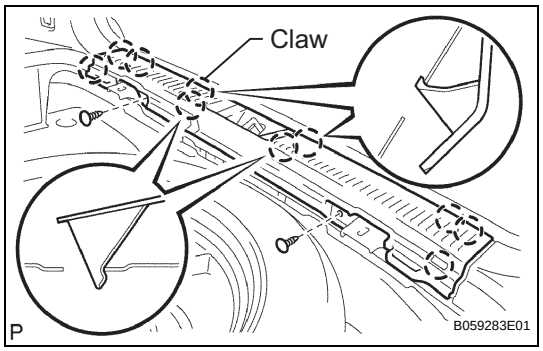

20. REMOVE REAR DECK TRIM COVER
(a) Remove the 2 clips.
(b) Using a moulding remover, remove the deck trim cover rear.

21. REMOVE TONNEAU COVER ASSEMBLY

22. REMOVE REAR SEAT CUSHION ASSEMBLY
HINT:
See page SE-18

23. REMOVE REAR SEATBACK ASSEMBLY
HINT:
See page SE-18

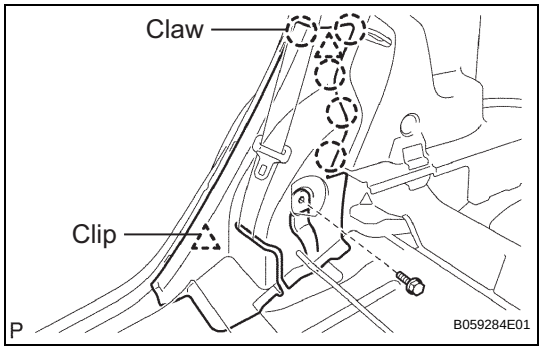

24. REMOVE REAR SEAT SIDE GARNISH LH
(a) Remove the bolt and seat back hinges.
(b) Using a screwdriver, remove the side garnish.
HINT:
Tape the screwdriver tip before use.

25. REMOVE REAR SEAT SIDE GARNISH RH
HINT:
Use the same procedures described for the LH side.

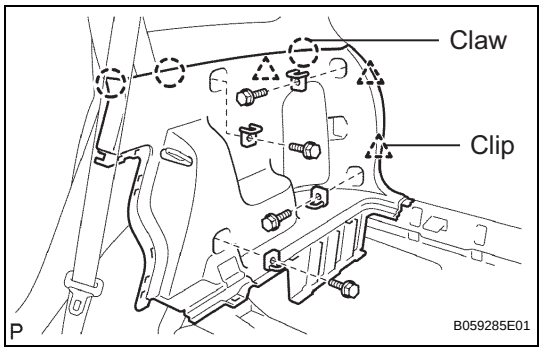

26. REMOVE DECK TRIM SIDE PANEL ASSEMBLY LH
(a) Remove the 4 bolt and 4 rope hooks.
(b) Using a screwdriver, disengage the 3 claws and 3 clips, and remove the side panel.
HINT:
Tape the screwdriver tip before use.

27. REMOVE DECK TRIM SIDE PANEL ASSEMBLY RH
HINT:
Use the same procedures described for the LH side.

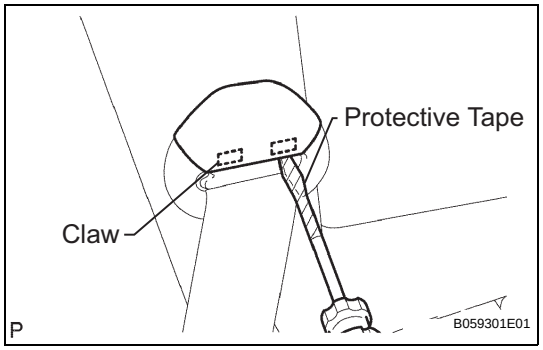

28. REMOVE ROOF SIDE GARNISH INNER LH
(a) Using a screwdriver, remove the seat belt anchor cover.
HINT:
Tape the screwdriver tip before use.
(b) Remove the bolt and rear seat 3-point belt.

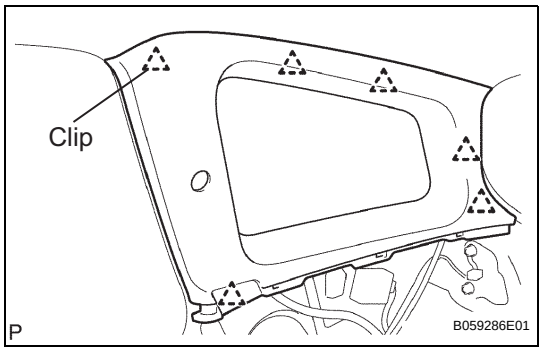

(c) Using a screwdriver, remove the roof side garnish.
HINT:
Tape the screwdriver tip before use.

29. REMOVE ROOF SIDE GARNISH INNER RH
HINT:
Use the same procedures described for the LH side.

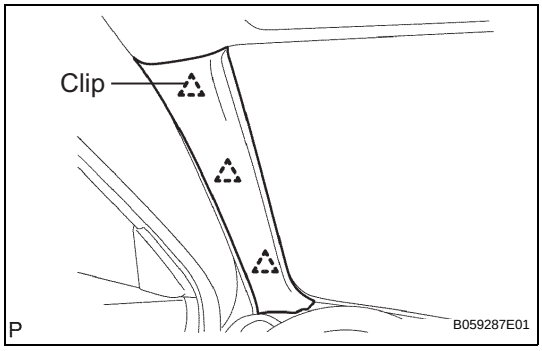

30. REMOVE FRONT PILLAR GARNISH LH
(a) Using a screwdriver, remove the pillar garnish.
HINT:
Tape the screwdriver tip before use.

31. REMOVE FRONT PILLAR GARNISH RH
HINT:
Use the same procedures described for the LH side.

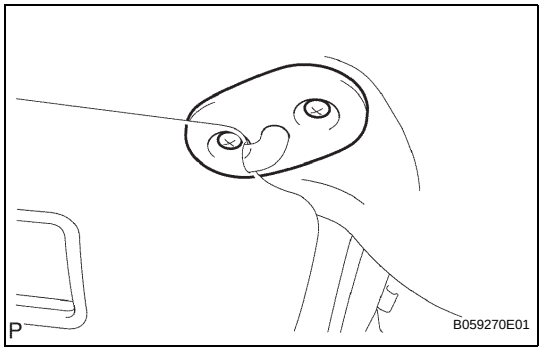

32. REMOVE VISOR ASSEMBLY LH
(a) Remove the 2 screws and visor.

33. REMOVE VISOR ASSEMBLY RH
(a) Remove the 2 screws and visor.

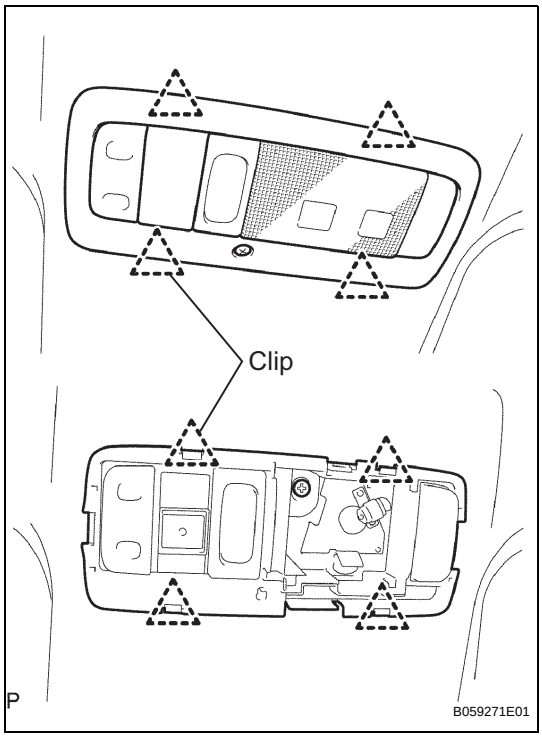

34. REMOVE MAP LIGHT ASSEMBLY
(a) Remove the screw.
(b) Using a screwdriver, disengage the 4 clips and remove the light lens and cover.
HINT:
Tape the screwdriver tip before use.
(c) Remove the screw.
(d) Using a screwdriver, remove the map light.
HINT:
Tape the screwdriver tip before use.

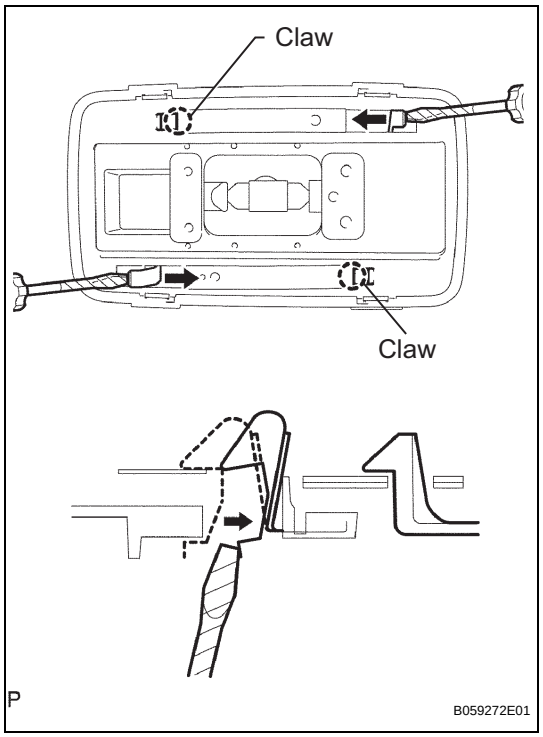

35. REMOVE NO. 1 INTERIOR LIGHT ASSEMBLY

(a) Using a screwdriver, remove the lens cover.

(b) Using a screwdriver, remove the room light, as shown in the illustration.
HINT:
Tape the screwdriver tip before use.

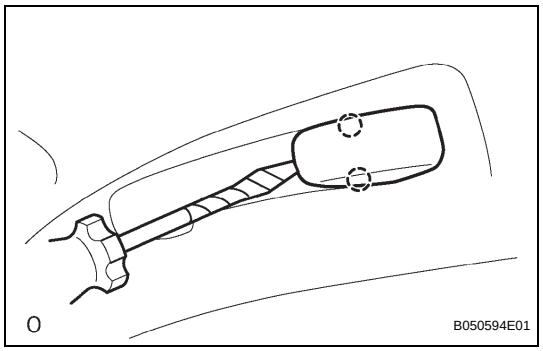

36. REMOVE ASSIST GRIP SUB-ASSEMBLY

(a) Using a screwdriver, remove the 2 grip covers.

(b) Remove the 2 screws and assist grip.
HINT:
Tape the screwdriver tip before use.

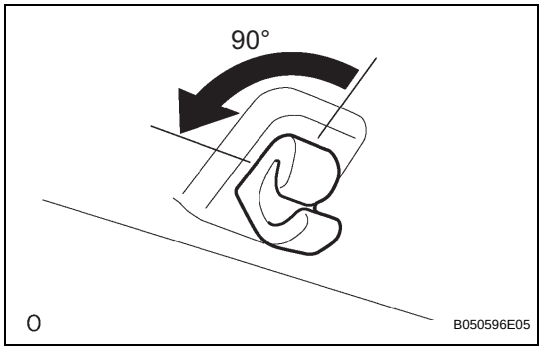

37. REMOVE VISOR HOLDER

(a) Remove the visor holder by turning it 90° counterclockwise.

38. REMOVE SUN ROOF OPENING TRIM MOULDING (w/ SLIDING ROOF)